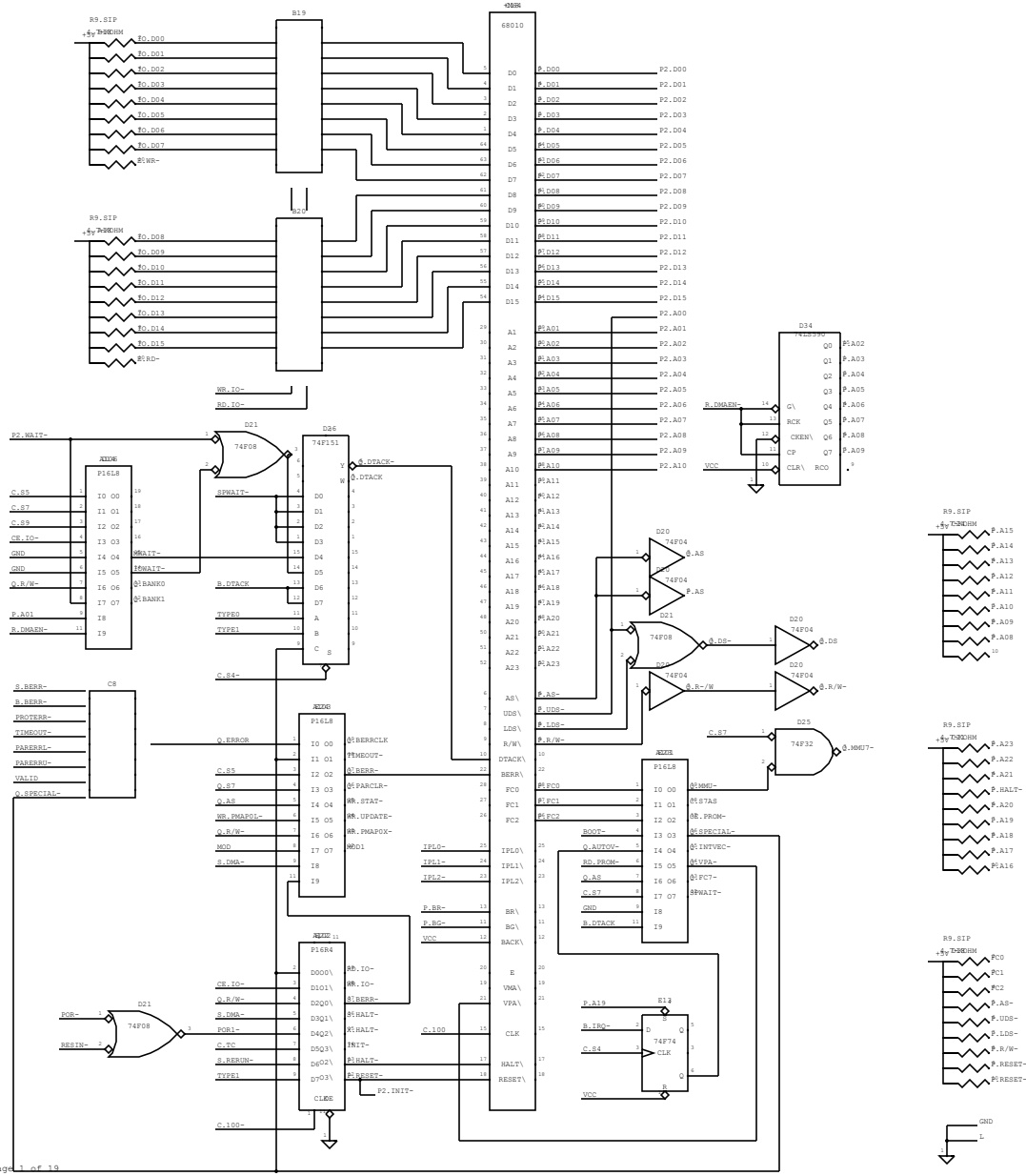

PROPRIETARY SMI, SUN-2

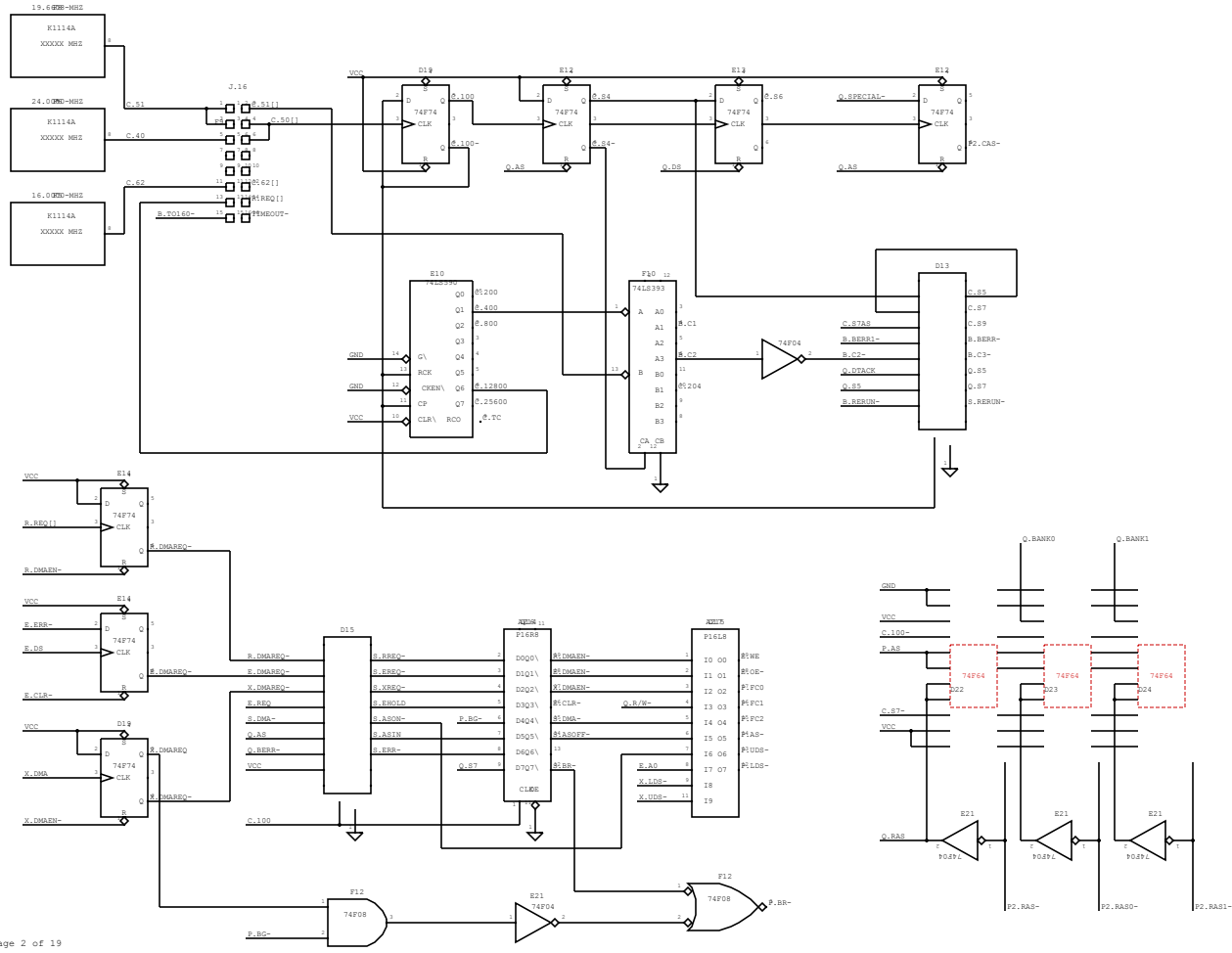

PROPRIETARY SMI, SUN-2, CLOCKS

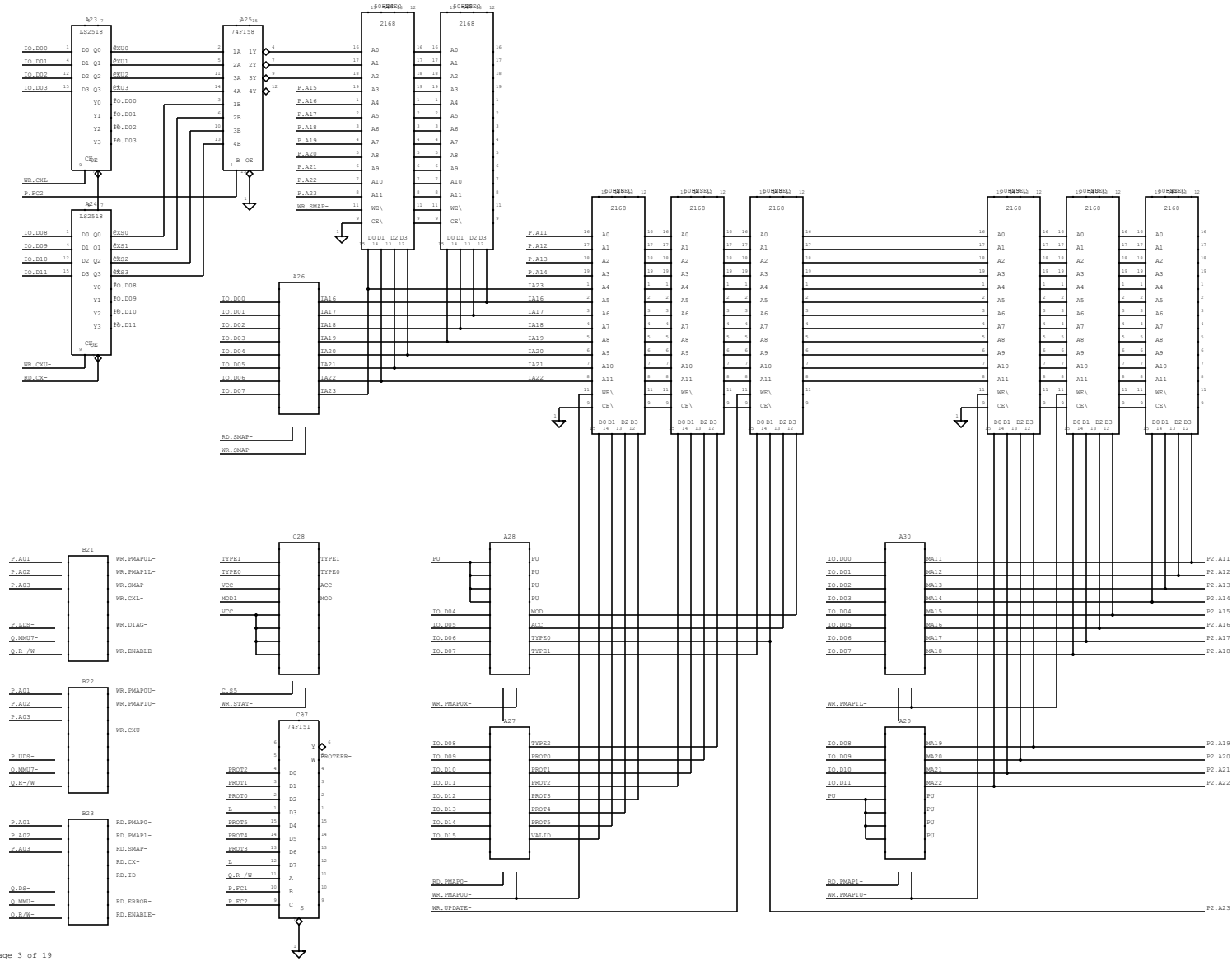

PROPRIETARY SMI, SUN-2

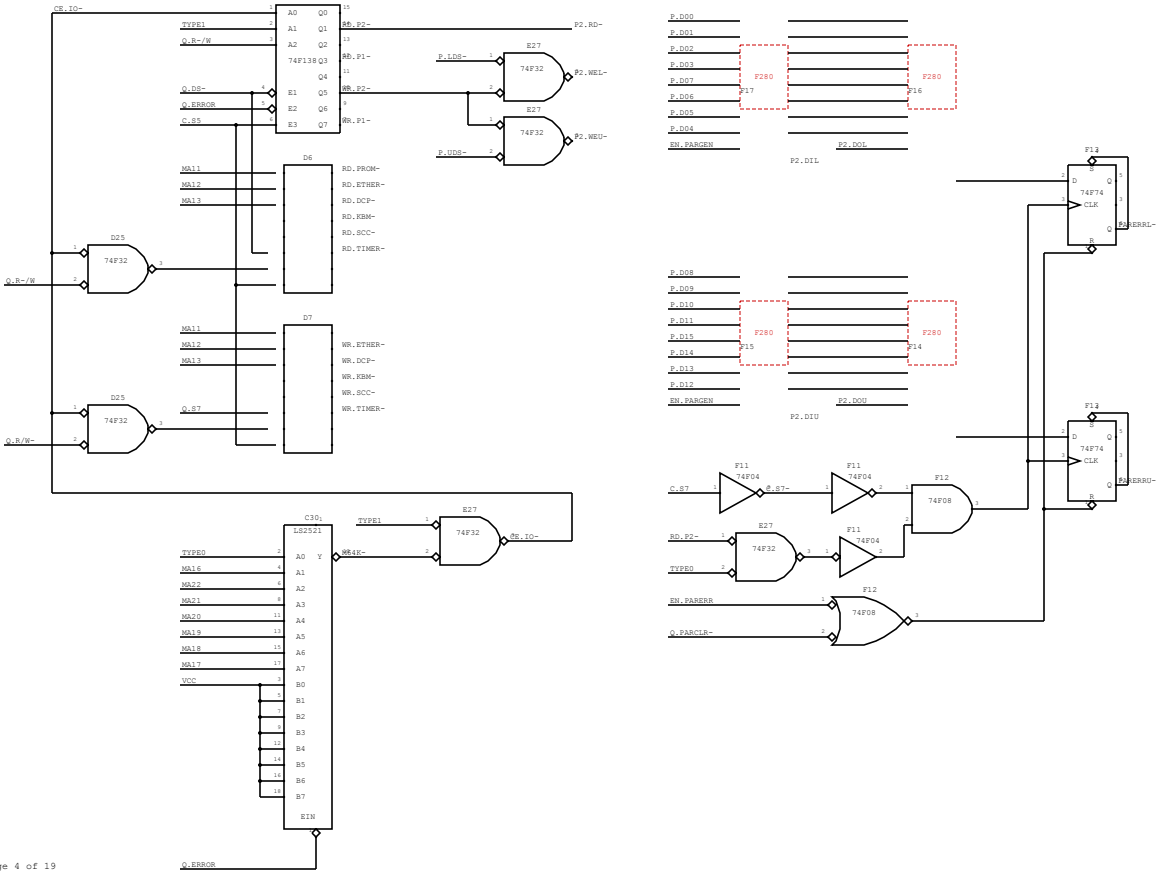

PROPRIETARY SMI, SUN-2

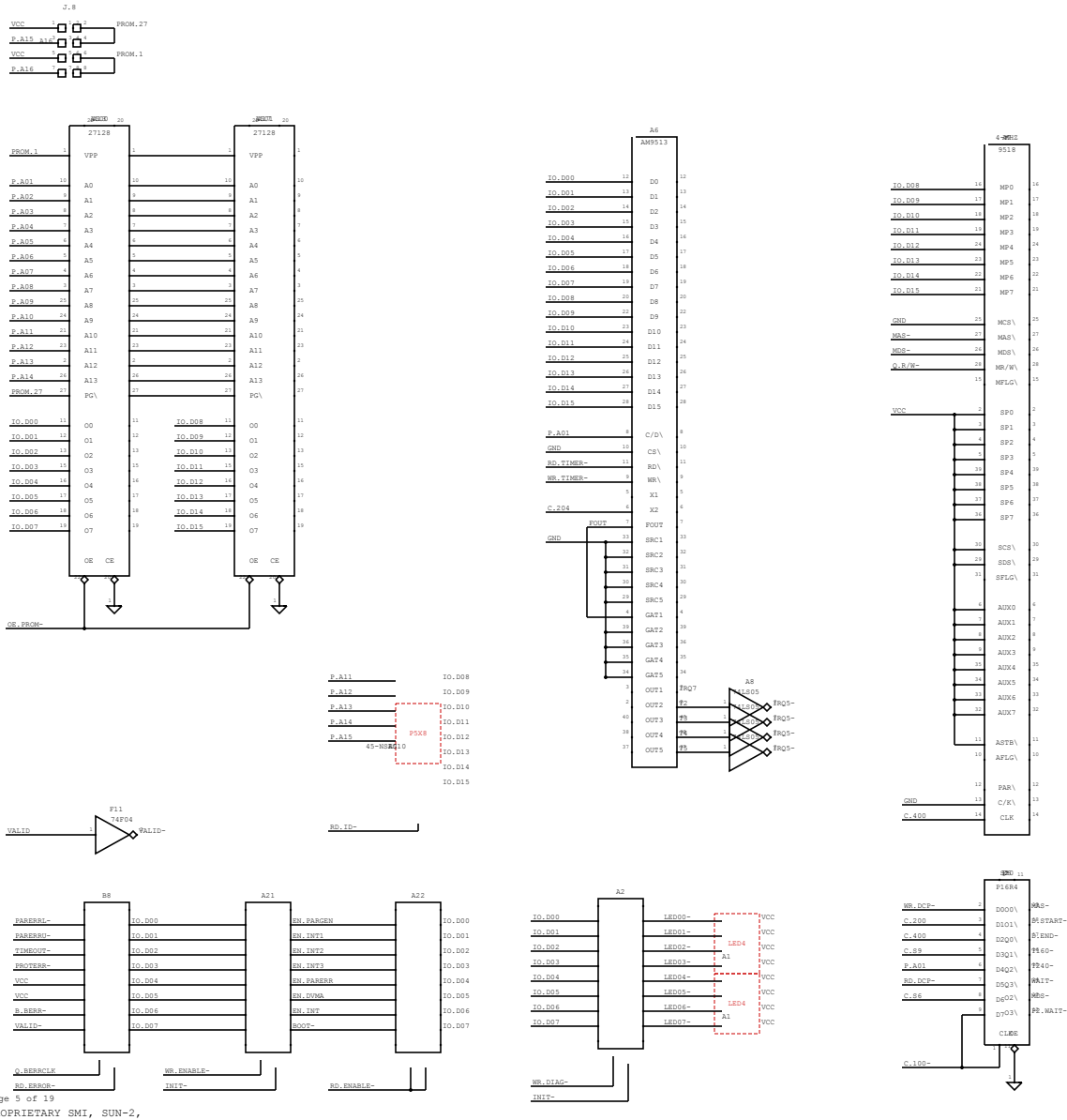

PROPRIETARY SMI, SUN-2,

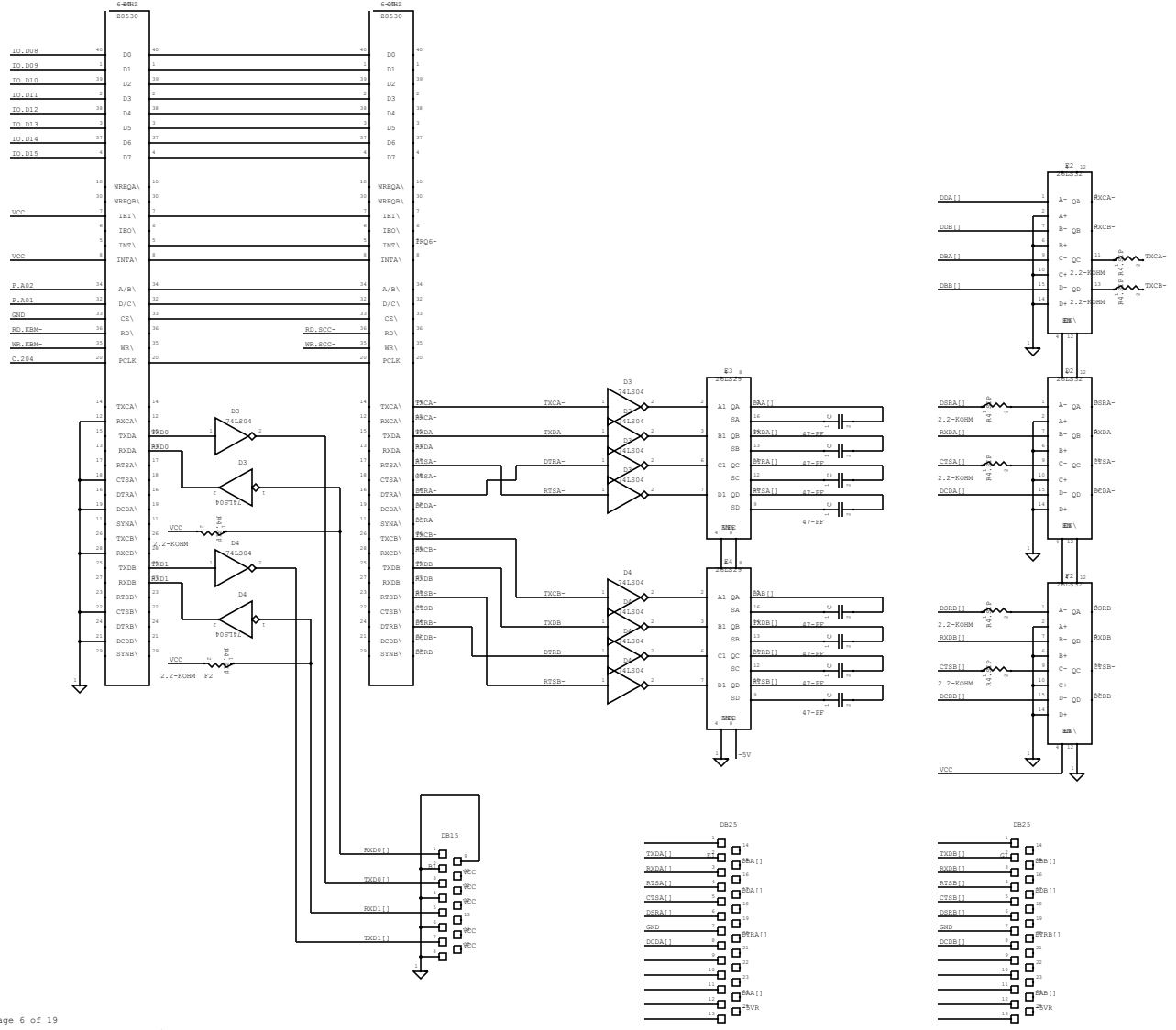

PROPRIETARY SMI, SUN-2, I/O — X

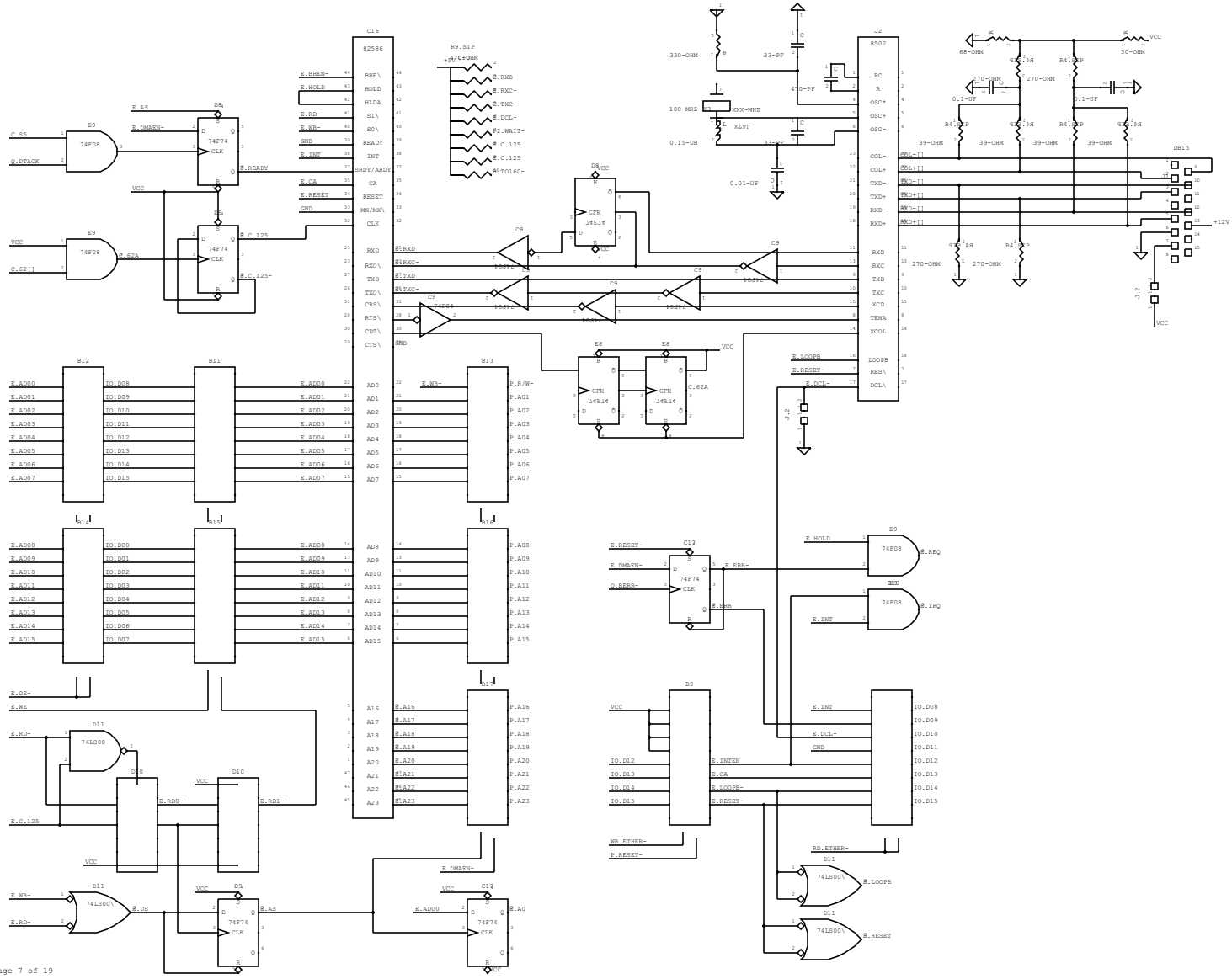

PROPRIETARY SMI, SUN-2, ETHERNET INTERFACE

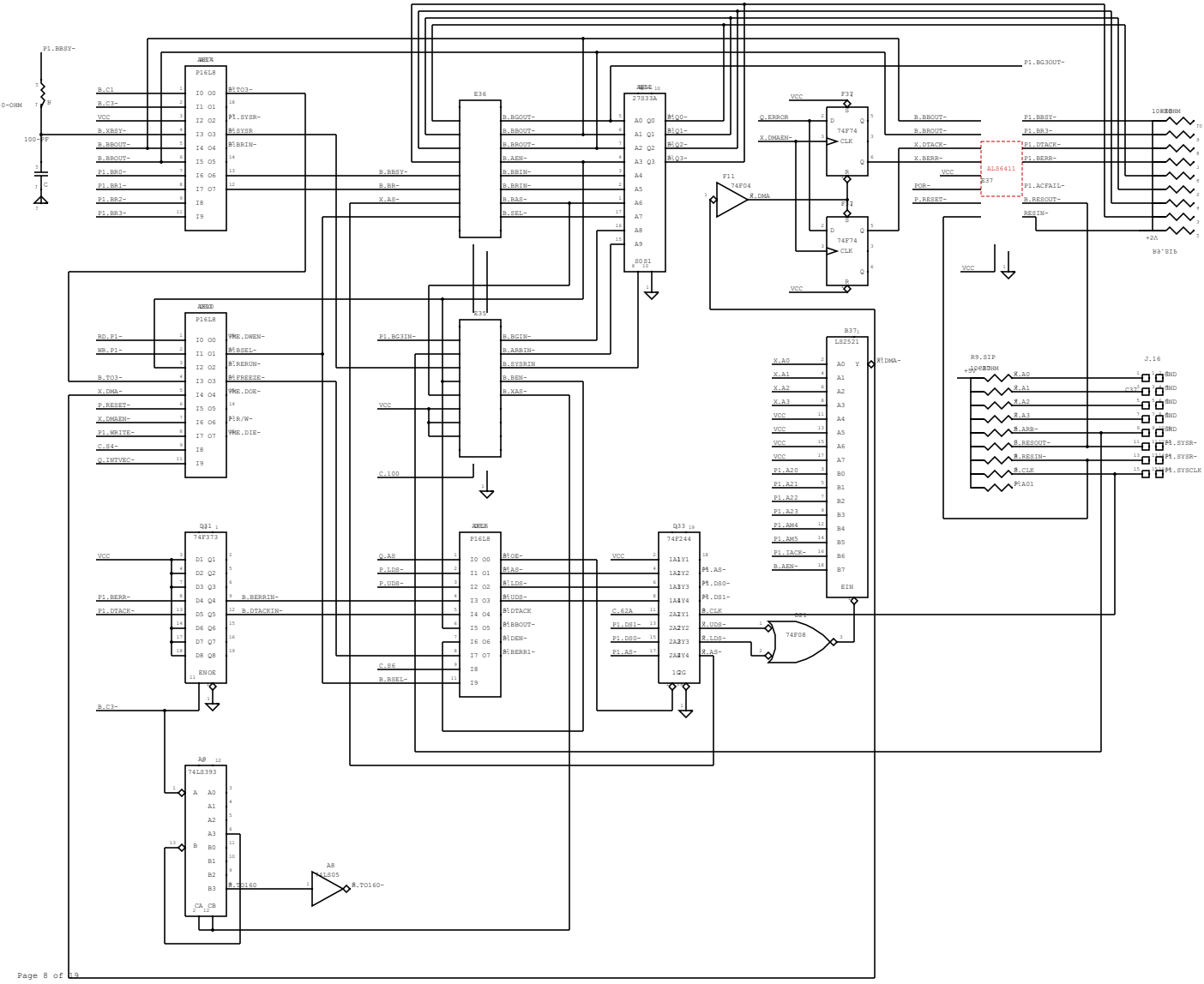

PROPRIETARY SMI, SUN-2

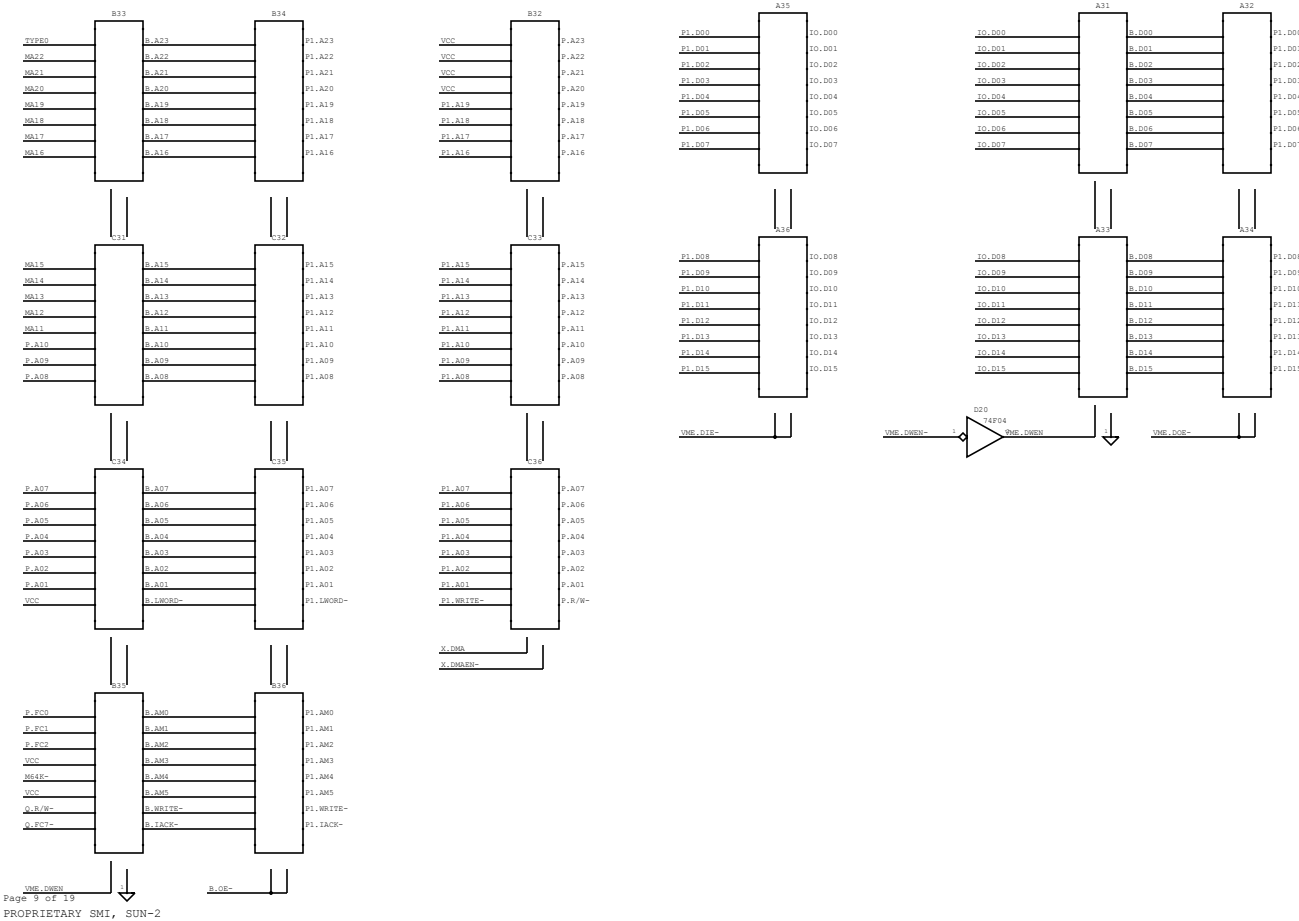

PROPRIETARY SMI, SUN-2

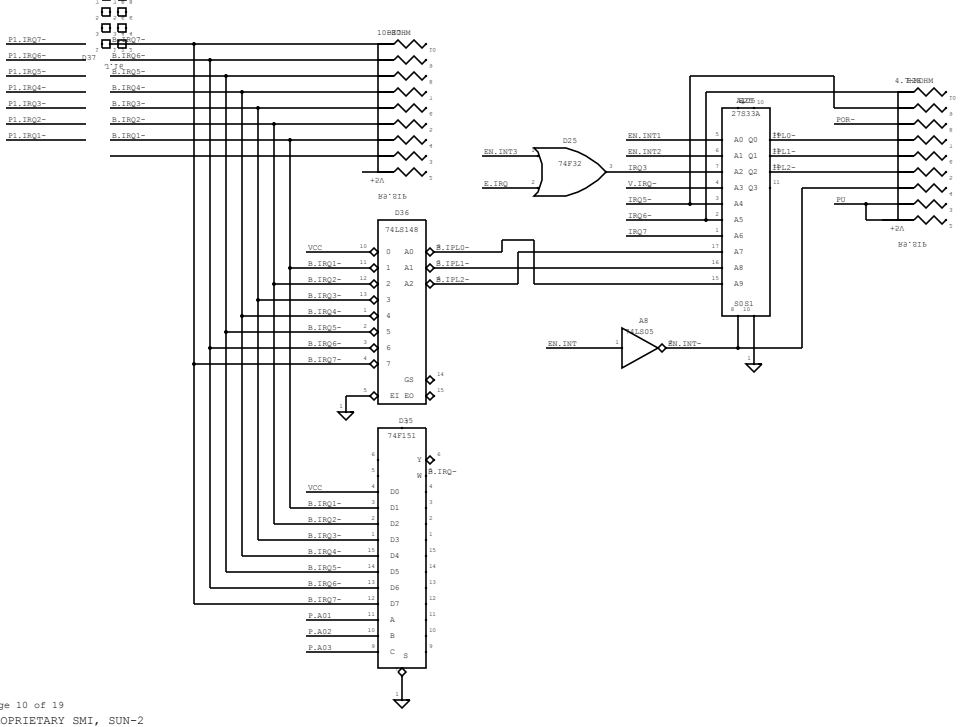

PROPRIETARY SMI, SUN-2

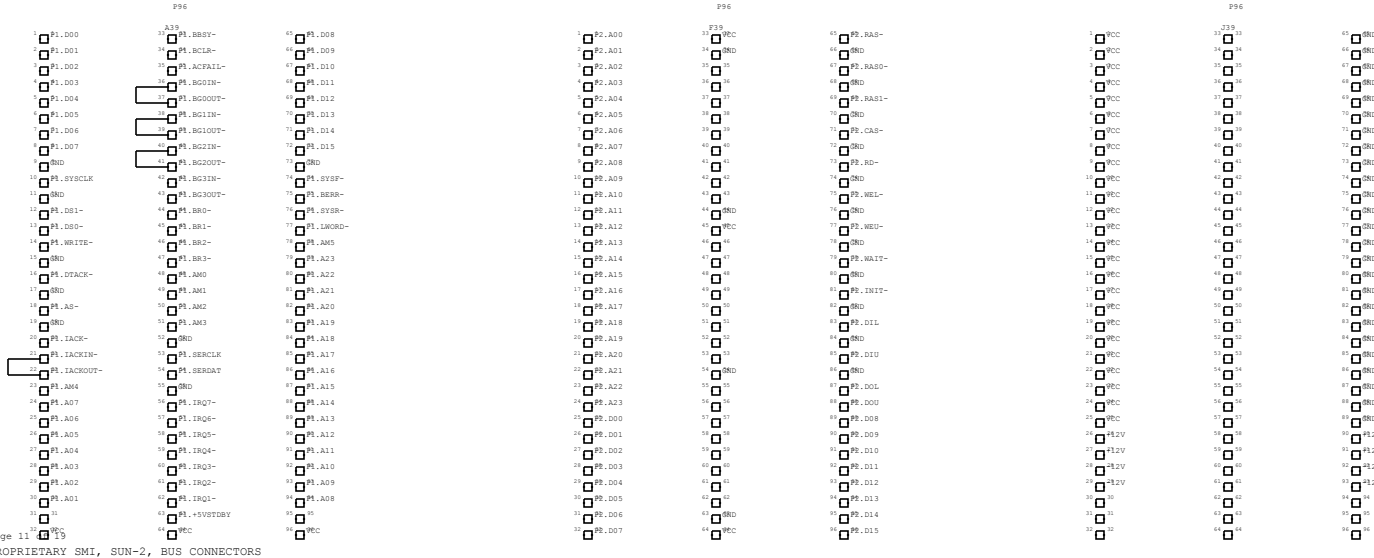
P96
A35
P1.D00
P1.D01
P1.D02
P1.D03
P1.D04
P1.D05
P1.D06
P1.D07
GND
P1.SYSCLK
GND
P1.DS1-
P1.DS0-
P1.WRITE-
GND
P1.DTACK-
GND
P1.AS-
GND
P1.IACK-
P1.IACKIN-
P1.IACKOUT-
P1.AM4
P1.A07
P1.A06
P1.A05
P1.A04
P1.A03
P1.A02
P1.A01
VCC
P1.BBSY-
P1.BCLR-
P1.ACFAIL-
P1.BG0IN-
P1.BG0OUT-
P1.BG1IN-
P1.BG1OUT-
P1.BG2IN-
P1.BG2OUT-
P1.BG3IN-
P1.BG3OUT-
P1.BR0-
P1.BR1-
P1.BR2-
P1.BR3-
P1.AM0
P1.AM1
P1.AM2
P1.AM3
GND
P1.SERCLK
P1.SERDAT
GND
P1.IRQ7-
P1.IRQ6-
P1.IRQ5-
P1.IRQ4-
P1.IRQ3-
P1.IRQ2-
P1.IRQ1-
P1.+5VSTDBY
VCC
P1.D08
P1.D09
P1.D10
P1.D11
P1.D12
P1.D13
P1.D14
P1.D15
GND
P1.SYSF-
P1.BERR-
P1.SYSR-
P1.LWORD-
P1.AM5
P1.A23
P1.A22
P1.A21
P1.A20
P1.A19
P1.A18
P1.A17
P1.A16
P1.A15
P1.A14
P1.A13
P1.A12
P1.A11
P1.A10
P1.A09
P1.A08
VCC
P96
F39
P2.A00
P2.A01
P2.A02
P2.A03
P2.A04
P2.A05
P2.A06
P2.A07
P2.A08
P2.A09
P2.A10
P2.A11
P2.A12
P2.A13
P2.A14
P2.A15
P2.A16
P2.A17
P2.A18
P2.A19
P2.A20
P2.A21
P2.A22
P2.A23
P2.D00
P2.D01
P2.D02
P2.D03
P2.D04
P2.D05
P2.D06
P2.D07
VCC
GND
GND
VCC
P2.RAS-
GND
P2.RAS0-
GND
P2.RAS1-
GND
P2.CAS-
GND
P2.RD-
GND
P2.WEL-
GND
P2.WEU-
GND
P2.WAIT-
GND
P2.INIT-
GND
P2.DIL
GND
P2.DIU
GND
P2.DOL
P2.DOU
P2.D08
P2.D09
P2.D10
P2.D11
P2.D12
P2.D13
P2.D14
P2.D15
VCC
VCC
VCC

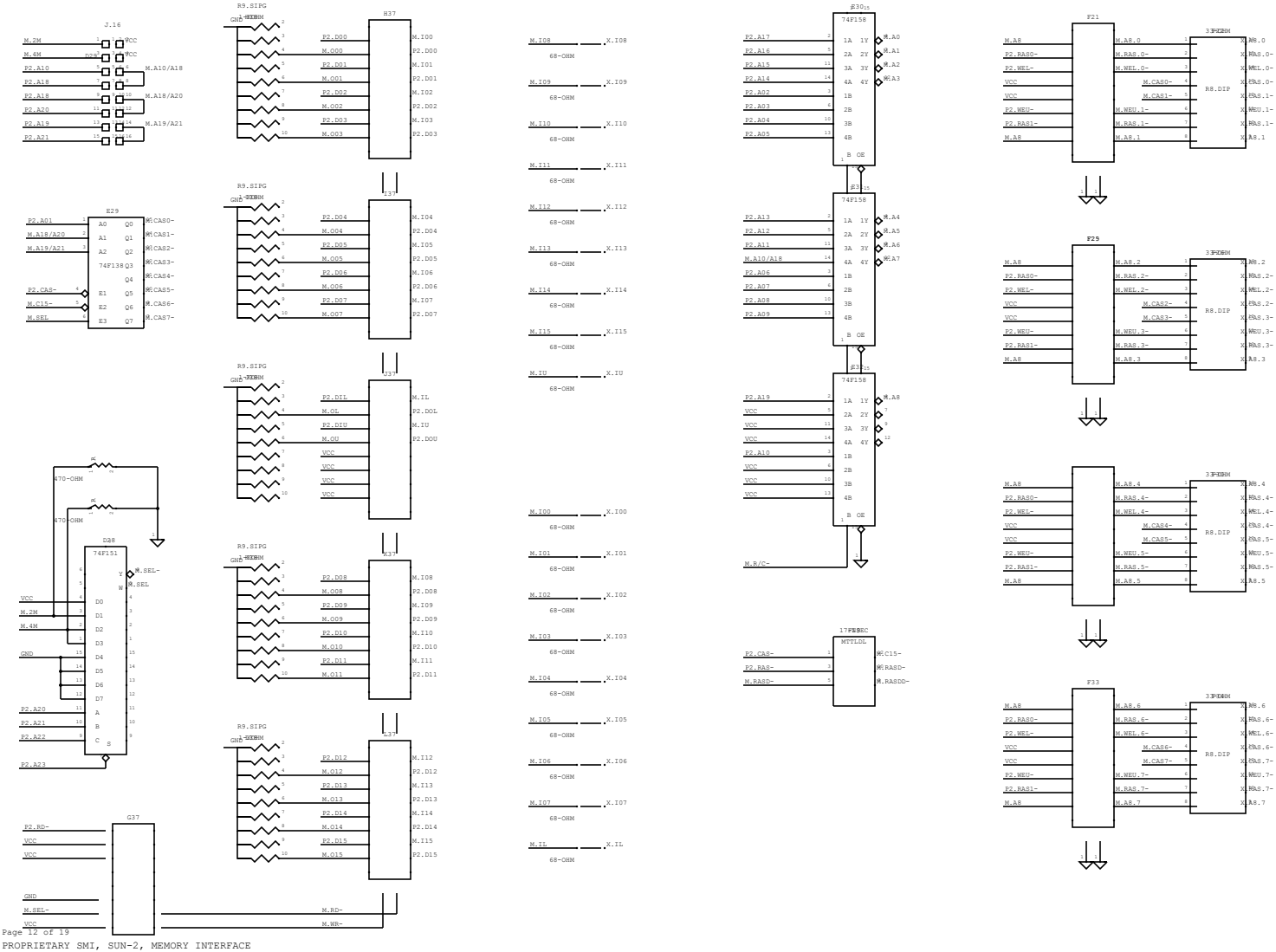

PROPRIETARY SMI, SUN-2, MEMORY INTERFACE

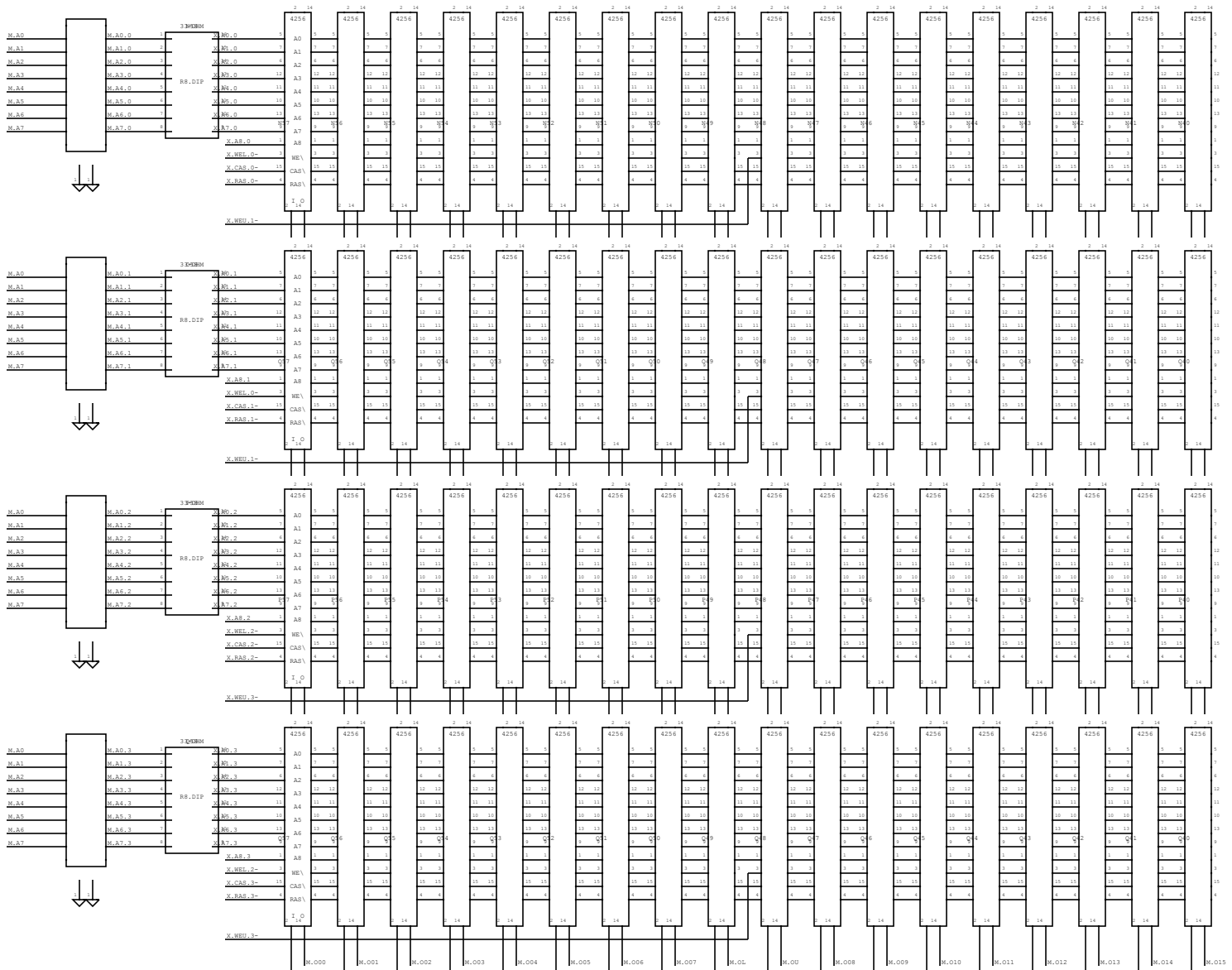
M.A0
M.A1
M.A2
M.A3
M.A4
M.A5
M.A6
M.A7
R8.DIP
X.A8.0
X.WEL.0-
X.CAS.0-
X.RAS.0-
X.WEU.1-
X.A8.1
X.WEL.0-
X.CAS.1-
X.RAS.1-
X.WEU.1-
X.A8.2
X.WEL.2-
X.CAS.2-
X.RAS.2-
X.WEU.3-
X.A8.3
X.WEL.2-
X.CAS.3-
X.RAS.3-
X.WEU.3-
4256
A0
A1
A2
A3
A4
A5
A6
A7
A8
WE\
CAS\
RAS\
I O
X.I00
X.I01
X.I02
X.I03
X.I04
X.I05
X.I06
X.I07
X.IL
X.IU
X.I08
X.I09
X.I10
X.I11
X.I12
X.I13
X.I14
X.I15
M.000
M.001
M.002
M.003
M.004
M.005
M.006
M.007
M.OL
M.OU
M.008
M.009
M.010
M.011
M.012
M.013
M.014
M.015

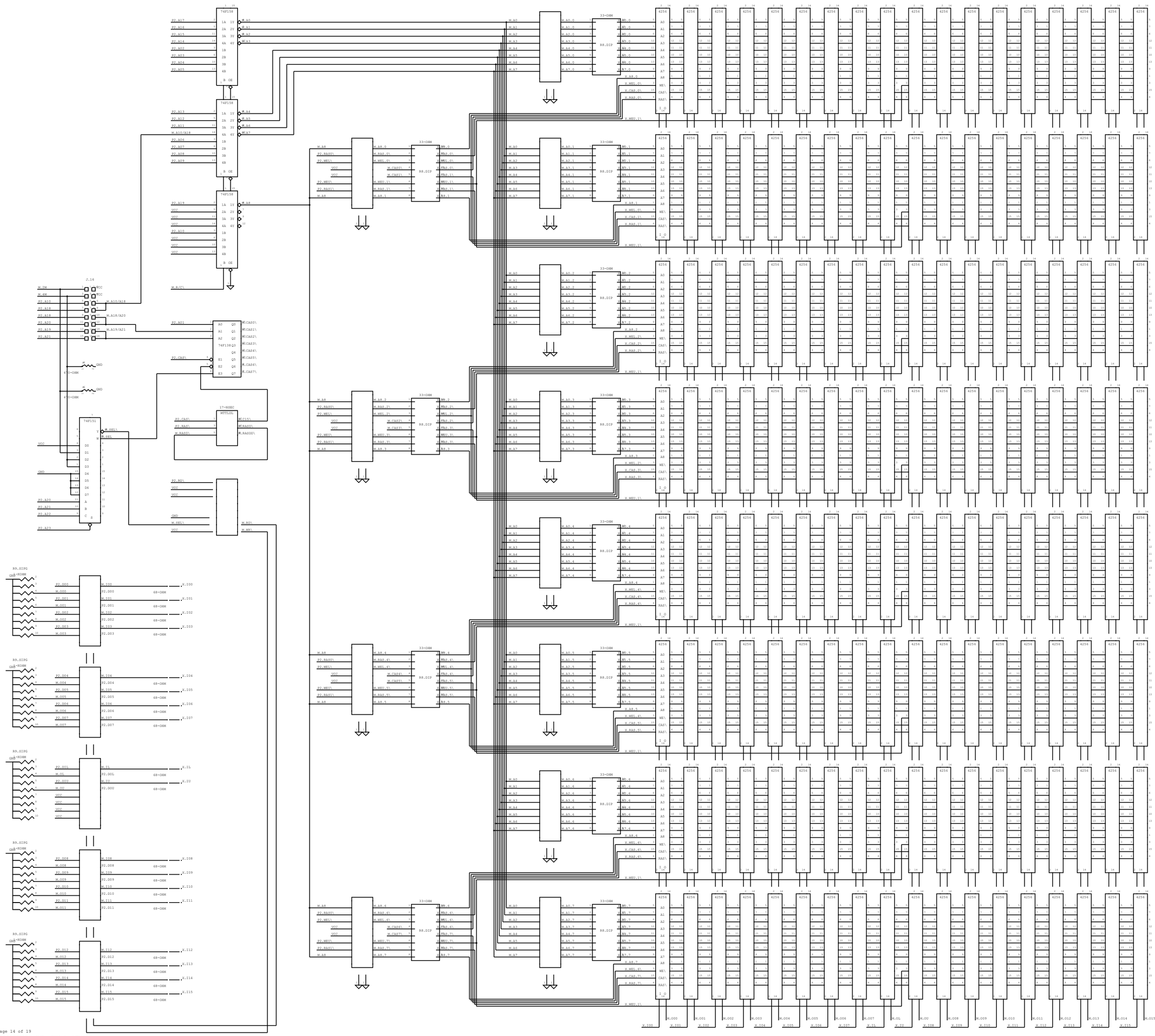

PROPRIETARY SMI, SUN-2, MEMORY

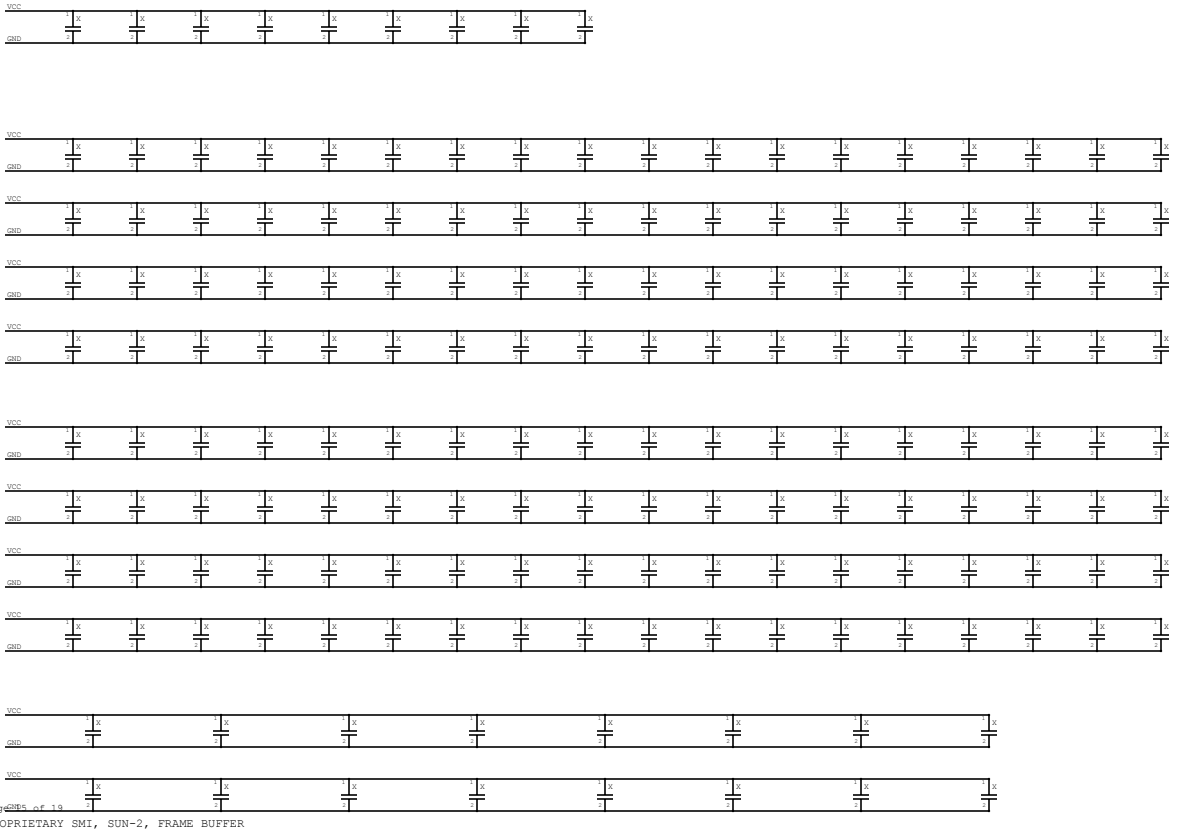

PROPRIETARY SMI, SUN-2, FRAME BUFFER

! VIDEO CONTROL REGISTER

! VIDEO DATA REGISTER

! VIDEO DATA MULTIPLEXOR

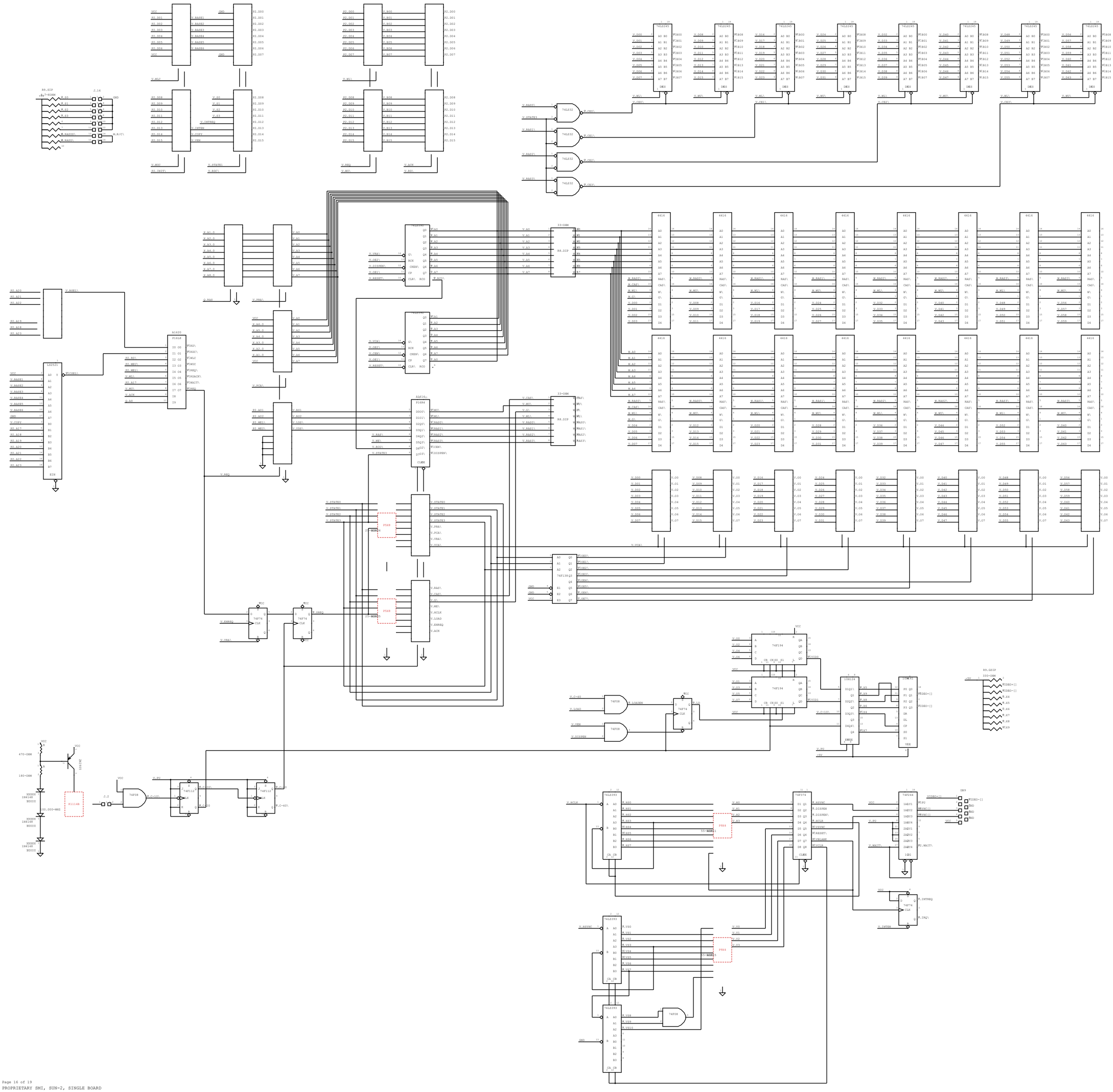

PROPRIETARY SMI, SUN-2, SINGLE BOARD

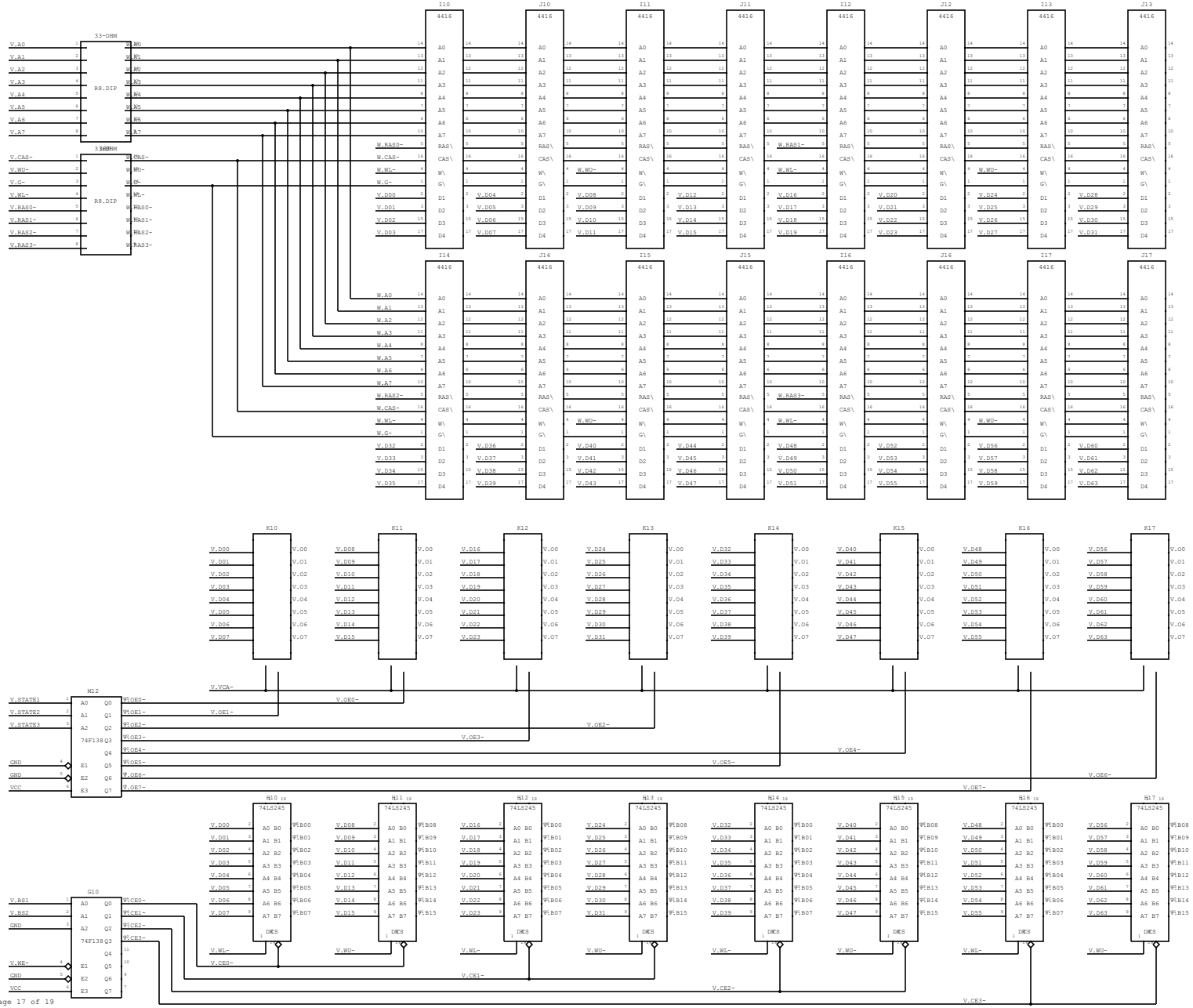

PROPRIETARY SMI, SUN-2, FRAME BUFFER

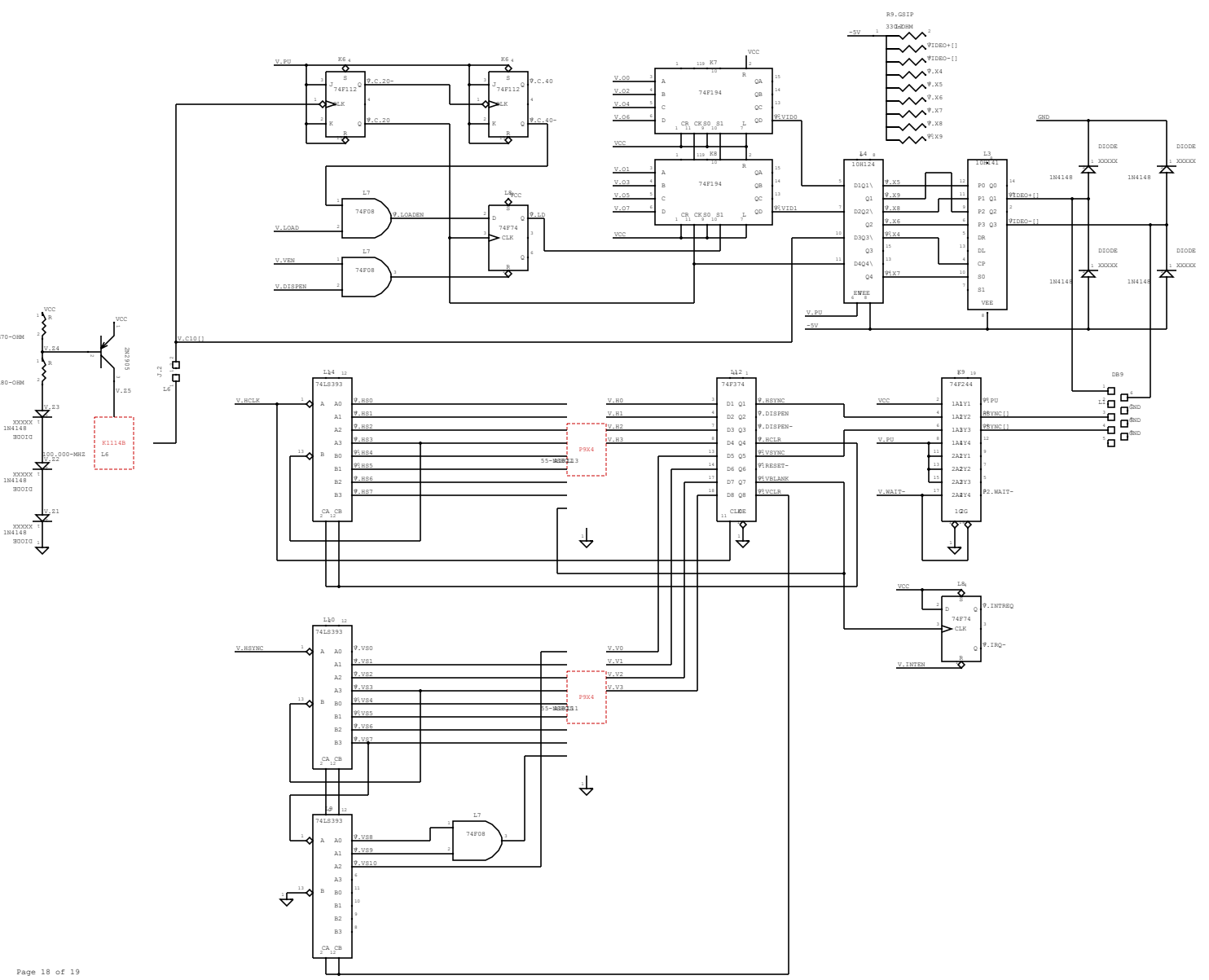

PROPRIETARY SMI, SUN-2, VIDEO CONTROLLER

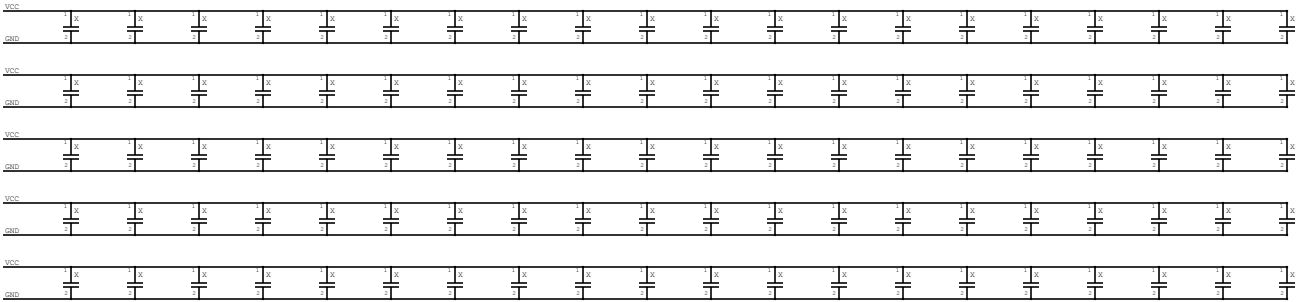

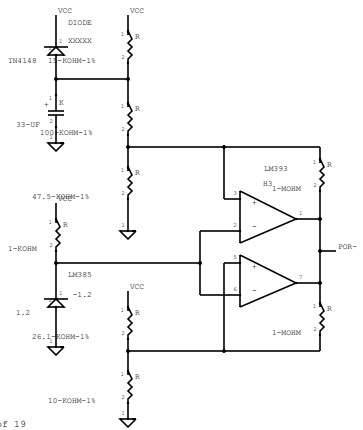

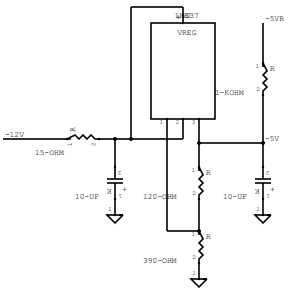

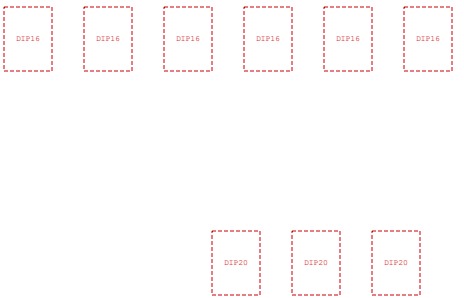

PROPRIETARY SMI, SUN-2, CAPS